# Cantilever

## Cantilever

Altima's exclusive cantilever arm system for use with standard Altima Track with fully adjustable mounting bracket to be fixed to the wall with screws or clamped to the top of display panels. Especially suitable for illuminating displays.

Supplied complete with track mounting brackets. One to be used every 60cm with standard track or 120cm foil tracks are used.

The powerfeed to the transformer is neatly concealed within the cantilever arm.

| | |
|---|---|
| LV.WD0.6010.13 | Satin Silver |
| LV.WD0.6010.50 | Black |
| LV.WD0.6010.57 | White |

Supplied in set of 2

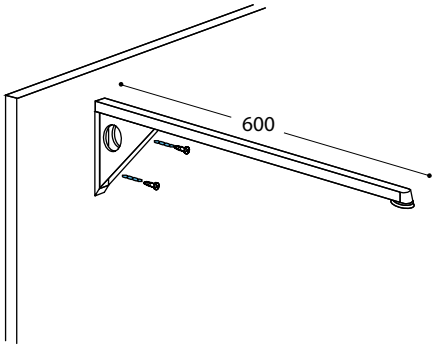


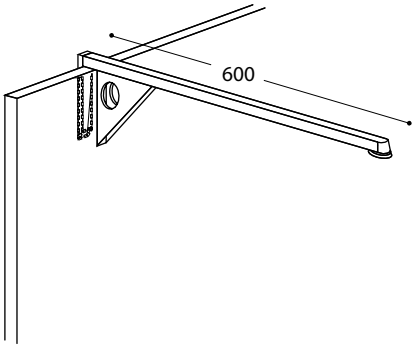


## Technical Data

| | |
|---|---|
| Finish | painted |
| Material | aluminium |
| Mounting | see instruction sheet |



1B60001 - 1108 - 18